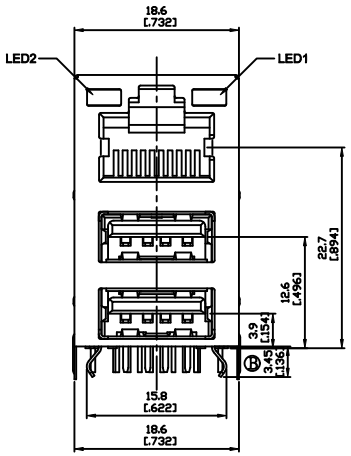

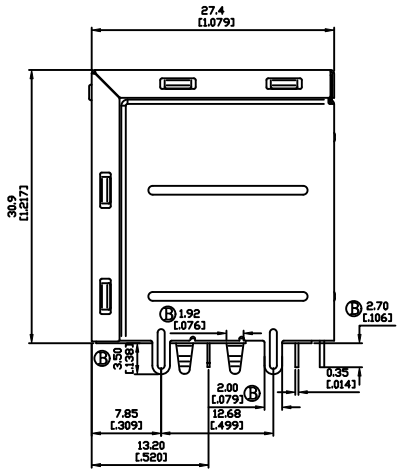

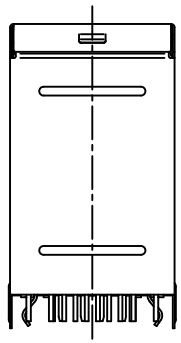

Electrical Characteristics :
Insulation Resistance : 500MΩ Min.
Contact Resistance : 50mΩ Max.
Withstand Voltage : 1000 VAC 1 minute.
Current Rating : 1.5A

Material:
Housing : Thermoplastic UL94V-0
Contact : 0.35mm Thickness Selective Gold Plating
Terminal: 0.35mm Thickness Phosphor Bronze
Plated With Gold And Tin In Solder Area.
Shield : See Shield Material Table.
Shield Cover : See Shield Material Table.

PART NO :S U A J - 2 8 0 0 - 0 ＊ ＊ -0 0 - B ＊ ＊

Contacts
Panel Ground
0 : Non-Panel Ground
U : Top With Panel Ground
D : 2 Side With Panel Ground
S : 3 Side With Panel Ground
Housing Color
Gold Plated
Led
PBT
Shielded Material
LED Polarity

部位 / 編號	M.J.	USB
0	Black	Black

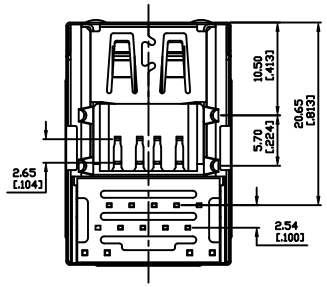

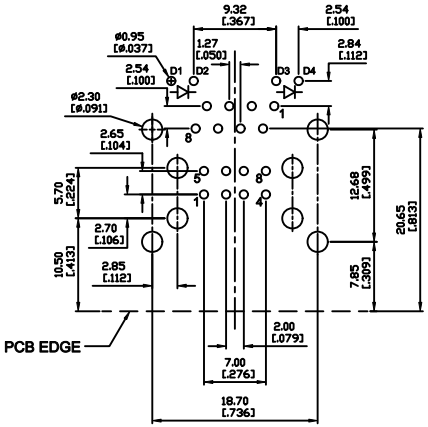

SUGGESTED PCB LAYOUT
TOP VIEW

LED Polarity Table
(Applicable only for single-colored LED)

部位 / 編號	LED 2 (Left)	LED 1 (Right)
0	D1 + - D2	D3 + - D4
1	D1 + - D2	D3 - + D4
2	D1 - + D2	D3 + - D4
3	D1 - + D2	D3 - + D4

Gold Plated

部位 / 編號	M.J.	USB
0	Gold Flash	1.1
1	6u"	
2	15u"	
3	30u"	
4	50u"	
5	Gold Flash	2.0
6	6u"	
7	15u"	
8	30u"	
9	50u"	

LED Color Options Table

LED Color Options		LED DASH OPTION
LED 2 (Left)	LED 1 (Right)	
No LED	No LED	0
Yellow	Green	1
No LED	Green	2
Yellow	No LED	3
Green	Yellow	4
Green	Green	5
Yellow	Yellow	6
Orange / Green	Orange / Green	7
Yellow / Green	Yellow / Green	8
Orange / Green	Yellow	9

Shield Material Table

Code	Shield		Shield Cover	
	Material	Plating	Material	Plating
0	SUS	Non	Brass	Nickel
1	Tinplate		Tinplate	
2	SUS	Non	Tinplate	

博 崴 電 子 股 份 有 限 公 司
POWERWAY ELECTRONICS CO.,LTD.

ZONE	REV.	DESCRIPTION	DATE	APPD.
Ⓐ	A.1	Withstand Voltage 500修改為1000VAC	2008-08-01	Nick
Ⓑ	A.2	增加尺寸	2009-05-19	Eric
Ⓒ				
Ⓓ				
Ⓔ				

FILE NO : SUAJ (SERIES)

TOLERANCE(公差) :
0.000 mm ± 0.075 mm
0.00 mm ± 0.15 mm
0.0 mm ± 0.25 mm

TITLE 圖 名	RJ45 / DUAL USB Combo			UNIT 單位	mm inch
PART NO. 料 號	SUAJ-2800-0＊＊-00-B＊＊			SCALE 比 例	1 : 1
REV. 版 本	A.2	DATE 日 期	2008-03-27		
CHECKED BY 審 核	Aaron		DRAWN BY 製 圖	Michael	