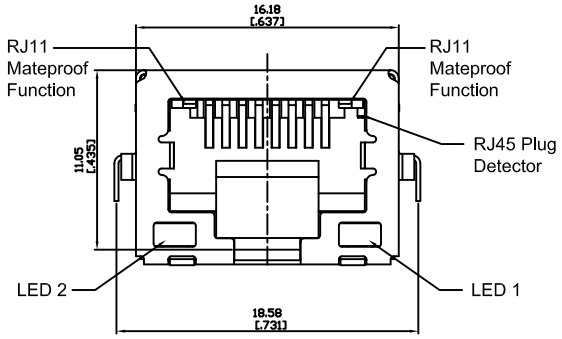


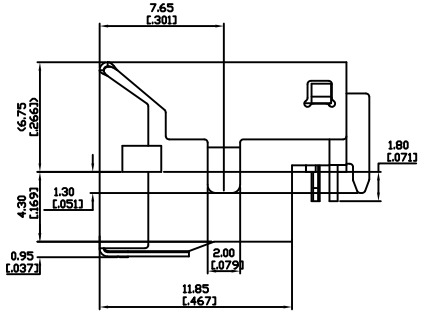


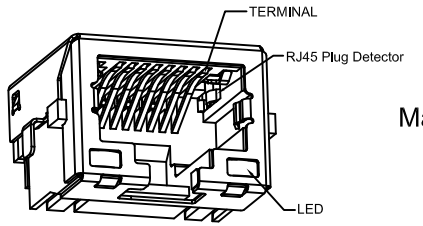


Electrical Characteristics :
- Insulation Resistance : 100MΩMin.
- Contact Resistance : 50mΩ Max.
- Withstand Voltage : 100 VAC 1 minute.
- Current Rating : 1.0A

Material:
- Housing : Thermoplastic UL94V-0
- Contact : Selective Gold Plating
- Terminal : 0.30mm Thickness Phosphor Bronze Plated With Gold And Tin In Solder Area.
- Shell : SUS,Nickel Plated On The All Area
- Detect Pin : Stainless Steel

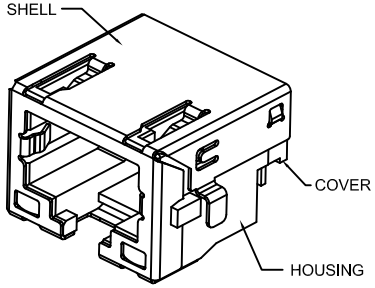


PART NO : 8 1 8 8 K T 1 - B ∗ 1 ∗

- Positions
- Contacts
- Housing Color
  B : Black
- Gold Plated
  0 : Gold Flash
  1 : 6u"
  2 : 15u"
  3 : 30u"
  4 : 50u"
- Ports
- Led Options

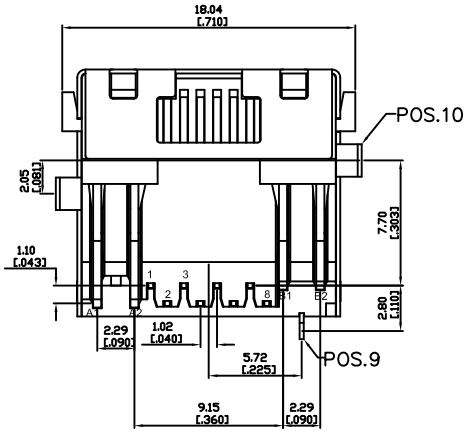


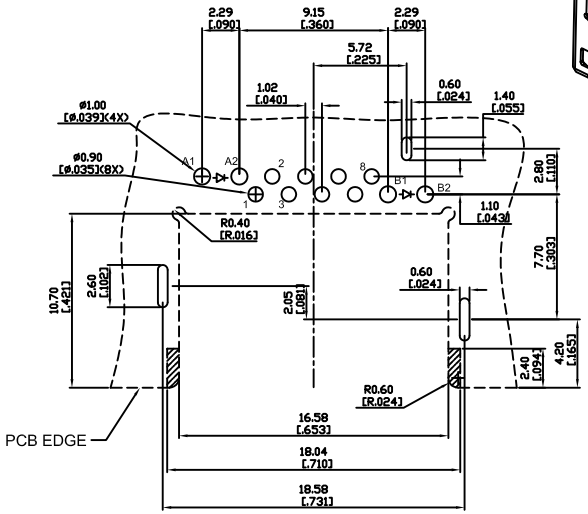


RECOMMENDED PCB LAYOUT
TOP VIEW

RECOMMENDED PCB THICKNESS:1.20± 0.05mm

LED Color Options Table

| LED Color Options | | LED DASH OPTION |
|---|---|---|
| LED 2 (Left) | LED 1 (Right) | |
| No LED | No LED | 0 |
| Yellow | Green | 1 |
| No LED | Green | 2 |
| Yellow | No LED | 3 |
| Green | Yellow | 4 |
| Green | Green | 5 |
| Yellow | Yellow | 6 |
| Orange/Green | Orange/Green | 7 |
| Yellow/Green | Yellow/Green | 8 |
| Orange/Green | Yellow | 9 |

博 崴 電 子 股 份 限 公 司
POWERWAY ELECTRONICS CO.,LTD.

| ZONE | REV. | DESCRIPTION | DATE | APPD. |
|---|---|---|---|---|
| Ⓐ | | | | |
| Ⓑ | | | | |
| Ⓒ | | | | |
| Ⓓ | | | | |
| Ⓔ | | | | |

FILE NO : 81 (SERIES)

TOLERANCE(公差) :
0.000 mm ± 0.075 mm
0.00 mm ± 0.15 mm
0.0 mm ± 0.25 mm

| | | | | | |
|---|---|---|---|---|---|
| TITLE 圖 名 | RJ45, Partial Shielded, With LED, Offset Type(5.25mm), Thru Hole, RJ11 Mateproof Function, RJ45 Plug Detector | | | UNIT 單位 | mm inch |
| PART NO. 料 號 | 8188KT1-B∗1∗ | | | SCALE 比 例 | 1 : 1 |
| REV. 版 本 | A.0 | DATE 日 期 | 2009-11-13 | | |
| CHECKED BY 審 核 | Michael | DRAWN BY 製 圖 | Sunny | | |